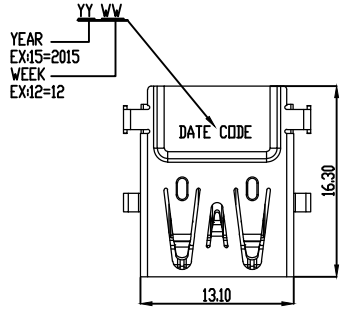

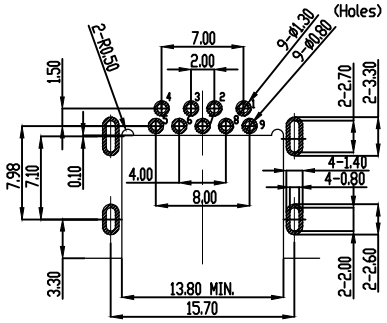

Recommed P.C.B. Layout Component Side (Top View)
Default Tolerances +/-0.05mm P.C.B. Thickness=1.0mm

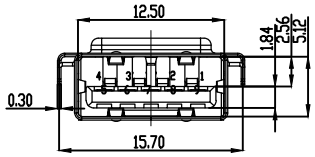

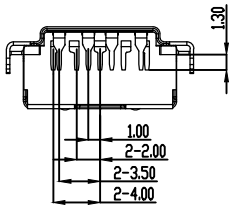

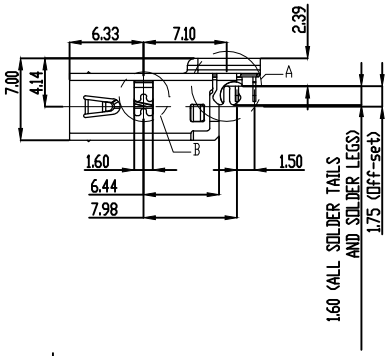

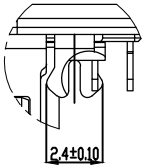

SPECIFICATIONS

Current Rating:	1.8 Amp shall be applied to Vbus pin and its corresponding GND pins. 0.25 Amp shall be applied to all other contacts
Contact Resistance:	30 Megohms initial for Vbus & GND Contacts 50 Megohms initial for All Other Contacts
Insulator Resistance:	100 Megohms Min @ 100 DAC
Voltage Rating:	5V AC
Dielectric withstanding:	100V AC
Operating Temperature:	−25°C~+105°C
Mating Cycle:	5000
Contacts:	Copper Alloy
Shell:	Steel
Under plate:	60u"~100u" Nickel
Solder Tail Area:	100u"~200u"Tin (Lead Free)
Contact Area:	1u" Gold
Insulator Material:	Thermoplastic, UL 94V−0

BPA−PD	09	F	VB	T	N	0	C	XX	FG
1	2	3	4	5	6	7	8	9	10

1.SERIES NO.
BPA−PD=USB 3.1
2.CONTACT NUMBER
09=9Pins
3.CONTACT TYPE
F=Female
4.CONTACT AREA PLATING
VB=Gold Flash (Selective)
5.SOLDER TAILS AREA PLATING
T=100u"~200u" TIN
6.SHELL PLATING
N=Nickel(Steel)
7.CENTER HEIGHT OPTION
0=Off−set 1.75mm
8.PACKING OPTION
C=Tape & Reel
9.INSULATOR COLOR
3=BLUE (Pantone 300C)
3C=BLUE (Pantone 300C)+DATE CODE
10.Green Option
FG=RoHS Compliant (Matte−Halogen Free)

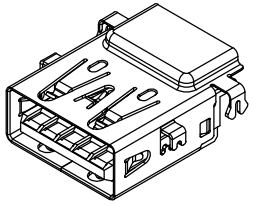

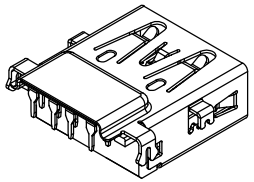

Pin Assignments

Pin Number	Signal Name
1	VBUS
2	D−
3	D+
4	GND
5	Stda_SSRX−
6	Stda_SSRX+
7	GND_DRAIN
8	Stda_SSTX−
9	Stda_SSTX+

APTOS Technology CONFIDENTIAL
This document, and all information it contains, are the confidential, propriatary property of APTOS Technology. Disclosure, duplication or distribution of this document, or any information it contains, in whole or part, without prior written permission from APTOS Technology is strictly prohibited

GENERAL TOLERANCE UNLESS OTHERWISE SPECIFIED					
XXX.	±	X	.XX	±	0.10
XX.	±	X	.XXX	±	X
X.	±	0.50	X.°	±	1°
.X	±	0.30	.X°	±	X°

REV.	A	DRAWN	09/15/09	APTOS TECHNOLOGY	BPA−PD Series USB 3.1 (Off−set 1.75mm))
DATE	09/15/09	CHECKED			
SCALE	As shown	APPROVED		PRODUCT NO.	BPA−PD09FVBTN0CXX−FG
UNIT	mm		SIZE A4	FILE NAME:	BPA−PD09FVBTN0CXX−FG.dwg